Acme Sanitary Ware Co Ltd
Acme Building, 22-28 Nanking Street, Kowloon, Hong Kong
Tel: 2388 7171 Fax: 2710 8012
E-mail: acme@acmesanitary.com.hk
Website: www. acmesanitaryware.com.hk

GROHE Pure Freude an Wasser

PROJECT		REF		REV	ITEM CODE	
LOCATION		DATE			PAGE	

SANITARY WARE SPECIFICATION SHEET

Item Descriptions	GROHE (Germany) "Grandera" Single-lever bath & shower mixer trim
Dimensions	L188 x W133 x H188 mm
Model	19920000 (Bath & shower mixer) 35501000 (Separate concealed body)
Finish	Chrome Plated
Country of origin	Germany
Manufacturer	GROHE Limited
Supplier	Acme Sanitary Ware Co. Ltd Mr. Eric Wong/ Mr. Don Yuen
Contact Tel/Fax E-mail Website	(852) 2388-7171 / (852) 2710-8012 acme@acmesanitary.com.hk www.acmesanitary.com.hk

Illustration/ Drawing

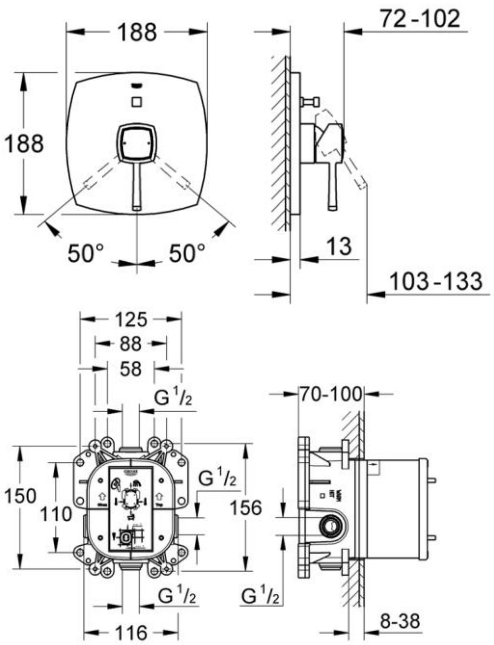

"Grandera"
Single-lever bath & shower mixer trim

- set for final installation for
- 33 961 000, 33 963 000, 33 965 000
- without concealed body
- **GROHE StarLight** chrome finish
- automatic diverter: bath/shower
- escutcheon- and shaft-sealing
- metal escutcheon
- covered fixing

"Rapido E"
Universal Single-lever mixer for concealed installation

- without finishing trim set
- **GROHE SilkMove** 46 mm ceramic cartridge
- adjustable flow rate limiter
- body of DR brass

Colour options:
- 000 I StarLight Chrome
- DC0 I SuperSteel
- DA0 I Warm Sunset
- A00 I Hard Graphite
- AL0 I Brushed Hard Graphite
- IG0 I Chrome/Gold
- GL0 I Cool Sunrise
- GN0 I Brushed Cool Sunrise
- DL0 I Brushed Warm Sunset
- BE0 I Polished Nickel
- EN0 I Brushed Nickel

Note: YouTube (Features of the GROHE Rapido E) https://www.youtube.com/watch?v=5-xKu7u9oPs
YouTube (Unboxing 35501000) https://www.youtube.com/watch?v=a2OecIySWcg

** All information of the above is for the reference only. No prior notice is made if any changes.*

Acme Sanitary Ware Co Ltd
Acme Building, 22-28 Nanking Street, Kowloon, Hong Kong
Tel: 2388 7171 Fax: 2710 8012
E-mail: acme@acmesanitary.com.hk
Website: www. acmesanitaryware.com.hk

GROHE
Pure Freude an Wasser

PROJECT		REF		REV	ITEM CODE	
LOCATION		DATE			PAGE	

SANITARY WARE SPECIFICATION SHEET

GROHE
GRANDERA

TOMORROW'S GRAND STYLE

The GROHE Grandera collection is both a homage to an age of grandeur long past and an affirmation of modern sensibility, combining the highest standards of quality and craftsmanship with a love of detail and comfort.

Stylistically, the Grandera collection can be combined with a wide range of bathroom furnishings, with the added flexibility of two colors – chrome and chrome / gold.

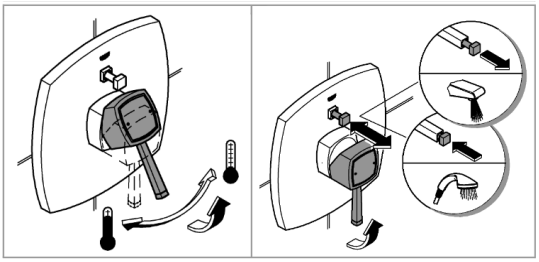

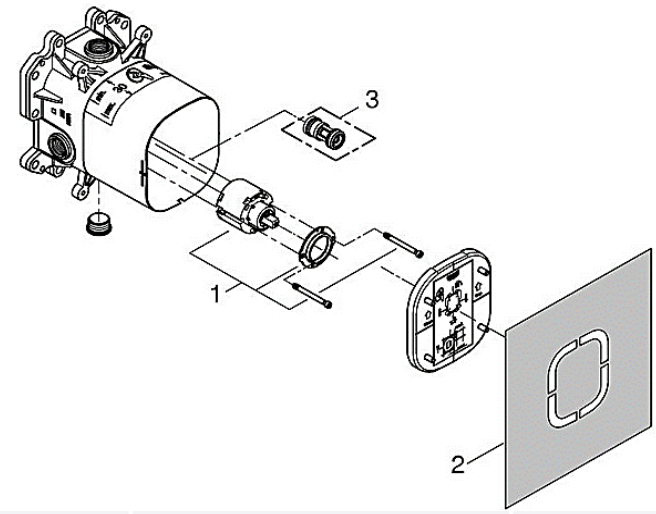

Pos.-nr.	Prod. description	Order-nr.
1	Cartridge	46048000
2	Seal kit	48263000
3	Safety combination (EN 1717)	29008000*

* Optional accessories

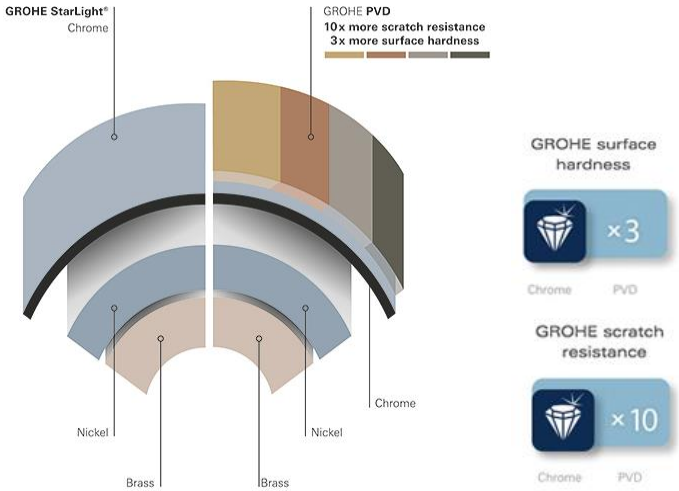

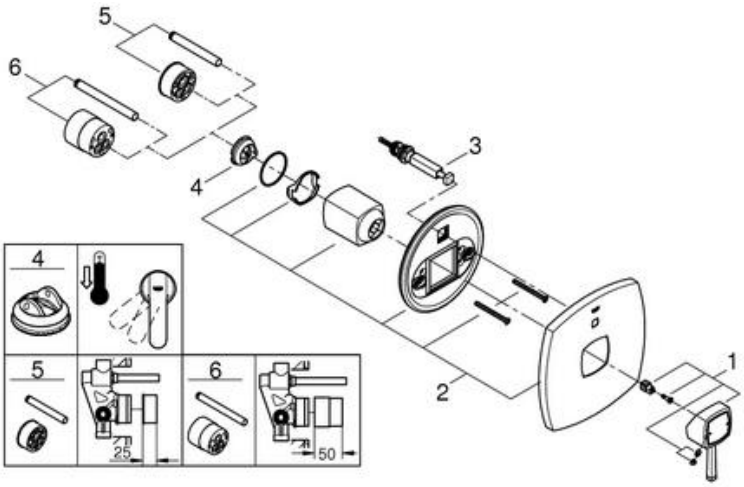

Pos.-nr.	Prod. description	Order-nr.
1	Lever	46833000
2	Escutcheon	46834000
3	Replacement kit for rotary valve	46785000
4	Temperature limiter	46375000*
5	Extension set	46191000*
6	Extension set	46343000*

* Optional accessories

Note:

** All information of the above is for the reference only. No prior notice is made if any changes.*